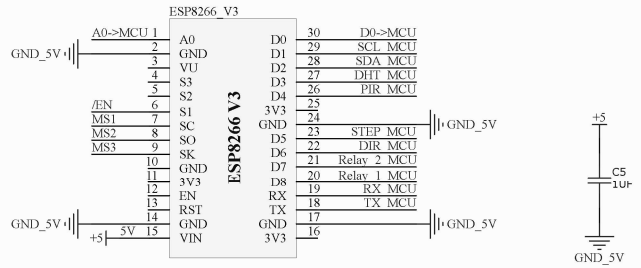

CONTROLLER

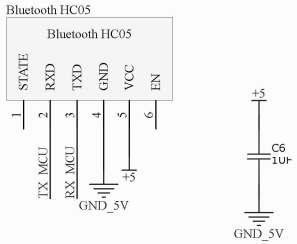

BLUETOOTH

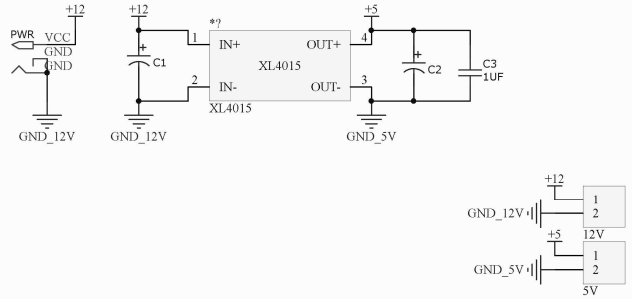

POWER 220V -> 12V -> 5V

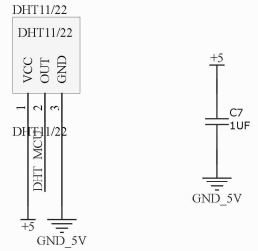

DHT 11

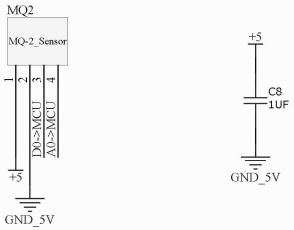

MQ2 SENSOR

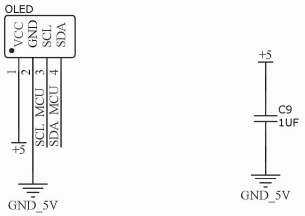

OLED I2C 1.3IN

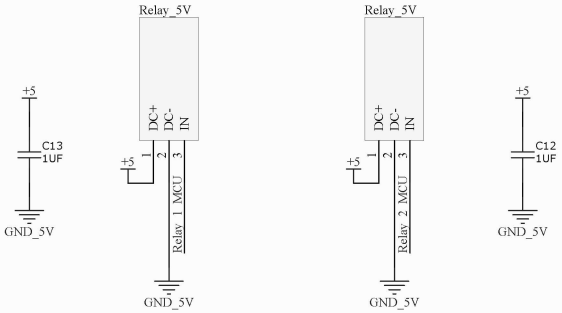

Relay 5V

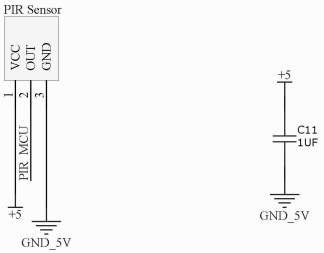

PIR SENSOR

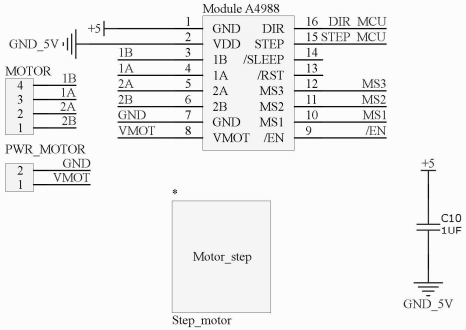

MODULE A4988

Title *			Altium Limited L3, 12a Rodborough Rd Frenchs Forest NSW Australia 2086
Size: A3	Number:*	Revision:*	
Date: 21/10/2024	Time: 10:59:31 SA	Sheet* of *	
File: C:\Users\Admin\Downloads\Product\CNTT\PCB\Sheet.SchDoc			